KNIGHT

IDEX

IDEX CORPORATION



On-Premise Global
Installation & Programming
Instruction Manual

TABLE OF CONTENTS

Pre-Installation 3
Installation 3
Operation 4
Keypad Diagram 5
Programming 6
Conformity Documentation 15
System Parts Diagram 16
System Wiring Diagram 17
Multilinking Wiring Diagram 18
Warranty Information 20
Knight Locations 20

Equipment Ratings

This includes equipment supply, description of I/O connections, duty cycle and operating environmental conditions.

1. Pollution degree 2;
2. Installation category 2;
3. Altitude 2000 m;
4. Humidity 50% to 80%
5. Electrical supply 120, 208, or 240 VAC, 50/60 Hz;
6. Indoor use only;
7. Temperature 5°C to 40°C;
8. Mains supply voltage fluctuations are not to exceed 10 percent of the nominal supply voltage;

Electrical Ratings

Chemical dispensing pumps, Models OP-Global, permanently connected, rated 120/208/240 V, 50/60 Hz, 1A.



CAUTION: Wear protective clothing and eyewear when dispensing chemicals or other materials. Observe safety handling instructions (MSDS) of chemical mfrs.



CAUTION: To avoid severe or fatal shock, always disconnect main power when servicing the unit.



CAUTION: When installing any equipment, ensure that all national and local safety, electrical, and plumbing codes are met.

PRE-INSTALLATION

Before the equipment is installed, you should survey the installation site thoroughly. At the very least, your survey should include the following:

- Check to make sure that all functions of the washmachine are operating properly. Including; card reader or timer, water solenoids, flush down valves, water level switch, machine motor, and drain valve.
- Check the proposed location for a 115, 208, or 230 VAC power source.
- Check voltage of all supply signals that will be used from the washmachine. Measure voltage between supply signal and signal common with a voltmeter. DO NOT check signal voltage between supply signal and case (earth) ground.
- Measure the distance from chemical supply containers to pump housing, and from pump housing to injection point inside washmachine.

INSTALLATION

(1) Disconnect all power to washer.

(2) Mount pump cabinet in a convenient location no higher than 8' above, and within 10' horizontally, of supply containers. This is usually near the washer, however dispenser can be mounted as a remote pumping system.

(3) Using the provided mounting bracket, mount the **Remote Control** to the front of the washer where operators can easily access it. Secure the bracket to washer using provided mounting screws or Dual-Lock fastening strips (be sure to first clean the mounting surface as the adhesive will not stick to a dirty surface). Connect the low voltage cable from the remote to the pump cabinet.

(4) Connect 115, 208, or 230 VAC power source to main power connection in pump cabinet. Use suitable conduit for electrical wiring (per applicable wiring codes). A suitable ground conductor should be connected to the ground terminal in accordance with local electrical codes. The user/installer should provide a disconnect switch or circuit breaker close to the equipment and should be marked that it is for this equipment.

NOTE: Low voltage Plug & Play cables do not require conduit.

(5) Install and wire the **Signal Interface Module** (SIB) per notes to the right.

(6) For each pump, cut the suction tube to length and insert one end into the appropriate supply container using PVC pipe as a support. Insert other end of suction tube into the left (input) side of the pump's squeeze tube.

(7) For each pump, cut the discharge tube to length and insert one end into the right (output) side of the pump's squeeze tube. Form an anti-siphon loop (pointing "down") with the other end of discharge tube and insert into the supply pocket of the machine.

(8) The system is now ready to be powered up and programmed.

The Signal Interface Module (SIB):

The SIB receives supply signals from the washer, then communicates with the dispenser to run the pumps. The low voltage Plug-n-Play cable allows a quick, clean connection from the module to the pump system without requiring conduit.

(1) Mount the module using the provided Dual Lock adhesive strip. The module can be mounted inside the washer's controls, along side the washer's controls, or to the bottom of the pump cabinet.

(2) Connect the low voltage cable from the module to the OP-Global pump system.

(3) Connect the supply signals to the SIB per wire colors on the SIB label. If using Drain Mode, only one signal is required (pump #1).

(4) If you have one signal common (typical) connect the common to "COM A" on the SIB. If you have two signal commons, you will need to remove a resistor inside the SIB before connecting the common wires! See the following details.

Splitting signal commons:

(1) Remove the four screws from the bottom of the SIB to open the module.

(2) Locate the three resistors marked R1, R2, and R4, on the left side of the module (each resistor has a single black band).

(3) Cut and remove the resistor that will "split" the commons between the desired pumps. Be sure to remove only one resistor.

CUT RESISTOR	*TO USE COM A FOR PUMPS*	*AND COM B FOR PUMPS*
R2	1, 2	3, 4, 5, 6
R1	1, 2, 3	4, 5, 6
R4	1, 2, 3, 4, 5	6

(4) Close the module and replace the four screws when finished.

OPERATION

❑ **NORMAL MODE:** The system is capable of 30 user selectable formulas with each formula having unique volumes and delay times for each pump. Signals from the washer trigger the pumps, then the OP-Global microprocessor takes control to count down delay times and run times with up to 3 individual “levels” (explained below) for each pump. The supervisor of the facility, or the machine operator, will select the formula using ▲/▼ buttons to choose the appropriate wash formula.

Programming "levels" allows a pump to inject different amounts of chemical for multiple signals to the same pump during a formula. For example, pump 1 could inject 8 ounces of chemical on its first signal, then later inject 12 ounces of chemical on its second signal. Three levels are available for any pump on any formula, except for the load count pump. ONLY 1 LEVEL CAN BE PROGRAMMED FOR THE LOAD COUNT PUMP (and any other pump that may be signaled simultaneously with the load count pump's signal). The level feature can also be used to “skip over” an injection. Simply do not program any volume or delay time for that level.

When a formula begins (after power is turned on or the “Load Count” pump has been triggered from the previous formula) the first signal to a pump will activate level 1. The signal has to be present for at least 5 seconds to be recognized. The second signal to the pump during the formula will activate level 2. The third signal to the pump during the formula will activate level 3. The load count pump signal must be received to reset levels in preparation for the next formula.

❑ **DRAIN MODE:** This mode is similar to normal operation but requires only one signal source from the washer and works by counting the number of drains during a wash cycle. When programming the dispenser for Drain Mode use, each chemical pump is assigned a specific drain occurrence (“drain count”) to inject product on. This feature only affects how the pumps are triggered – all other functions such as pump volumes, delay times, and flush mode, will still operate in their normal fashion.

During a wash formula, each drain signal is counted and the pumps inject chemical according to the drain number they are assigned. Drain mode is similar to normal operation, in that the pumps are programmed with volumes (and delay times if necessary) and the flush mode works the same way it does in normal operation.

The “multiple level” feature works slightly different in drain mode, because of the way drain mode counts the number of signals to pump #1 input. If a second injection level is required, it should be programmed to inject on a later drain number (occurrence) than the first level for that pump.

- Using signal lockout is not recommended for drain mode operation.
- During a washcycle, when pumps are idle, the display will show the formula name on the top line of the display and the current drain count on the bottom line. When a normal washcycle has ended, the drain count will show 00.
- Cycling power will reset the drain count if an incomplete load has been run.

❑ **RELAY MODE:** This type of operation is typically used with a microprocessor controlled washer. When set to relay mode, the system will run its pumps as long as their respective signals are present. To accomplish this, the system “by-passes” its volume and delay time capabilities for the chemical pumps; however, flush mode is still available for optional use.

❑ **SOIL MODE:** This operation allows three different soil classifications (light, medium, heavy) and the option of selecting bleach or softener. When a washcycle is ended, the system automatically resets itself to default settings. For example: The medium soil classification is automatically selected. The operator can choose light or heavy based on the next soil load. The bleach and softener pumps are also reset to their default settings (enable or disable, based on your specific programming preference). The bleach and softener pumps can also be overridden as necessary for the next washcycle.

KEYPAD DIAGRAM



	Allows you to choose the desired formula (unless using RELAY mode) for operation. When programming the system, allows you to change the value of a particular character (i.e. pump number, formula name, etc). A blinking “cursor” indicates which character will be changed by these buttons. Press repeatedly to advance through all available letters and numbers. The ▲ button also acts as a YES response for menus that have YES / NO prompts.
	Allows you to move (SCROLL) the cursor position within certain menu selections to choose items you wish to change. Also used to exit certain menu options or to exit the programming mode to return to normal operation.
	Allows you to access the system from the main (default) display. Takes you into the menus for programming. Logs data into memory when programming. Also acts as a NO response for menus that have YES / NO prompts.
	Allows you to choose the soil classification when using soil mode. The medium classification is always the default selection prior to starting a wash load. The operators can then select light or heavy as needed for the next soil classification.
	Allows you to enable or disable the bleach pump when using soil mode. You can choose if the bleach pump is enabled or disabled by default. Pressing this button will override the default setting.
	Allows you to enable or disable the softener pump when using soil mode. You can choose if the softener pump is enabled or disabled by default. Pressing this button will override the default setting.

PROGRAMMING

All systems are shipped from the factory with the access code set at 000. Changing the access code is explained later in this manual. **To get started, hold the ENTER button until you see the following display (this should only take a few seconds).**

ACCESS CODE 000 V1.0	Use the SCROLL and ▲/▼ buttons (not necessary if code has not yet been changed from factory default of 000) to input the access code, then press ENTER.
LANGUAGE = ENGLISH	Use the SCROLL and ▲/▼ buttons to select the desired language (for the programming menus and running displays) then press ENTER.
CLEAR LOAD COUNT UP=YES ENTER=NO	This selection allows you to clear the load count memory. Press ▲ if you wish to clear all load count information, or press ENTER to continue without clearing.
ARE YOU SURE? UP=YES ENTER=NO	If you pressed YES, this prompt will appear to double check that you are sure you want to clear load counts.
PRIME PUMPS ? UP=YES ENTER=NO	This selection allows you to prime the chemical pumps. Press ▲ if you wish to prime the pumps, or press ENTER to continue without priming. Use pump #9 if you wish to prime the flush manifold
PRIME PUMP 1 ENT = START/STOP	This selection allows you to prime pumps. Use ▲/▼ to choose the pump number, then press ENTER to start pump. Press ENTER again to stop pump. When finished priming the pump, you will return to the previous menu.
LOAD DEFAULTS ? UP=YES ENTER=NO	This selection allows you to clear pump volumes, flow rates and formula names in the dispenser and will reset the system to the factory default setting. Press ▲ if you wish to clear the memory and load defaults, or press ENTER to continue without loading.
ARE YOU SURE? UP=YES ENTER=NO	If you pressed YES, this prompt will appear to double check that you are sure you want to load defaults. NOTE: After loading defaults, the display window will show “On-Premise Global” briefly, then revert back to the run mode display—this is normal. You can then go back into programming mode using 000 as the access code.

CLEAR RPT DATA **UP=YES ENTER=NO**	This selection allows you to clear report data. Press ▲ if you wish to clear all existing report data, or press ENTER to continue without clearing.
ARE YOU SURE? **UP=YES ENTER=NO**	If you pressed YES, this prompt will appear to double check that you are sure you want to clear report data. NOTE: It will take a few minutes for this function to clear all report data—this is normal, so be sure to allow the unit enough time to complete the task.
RECEIVE SETUP **UP=YES ENTER=NO**	This menu allows you to copy all dispenser settings from another OP-Global handset. The handsets must be connected together with a USB (A-A) cable. Shut off the power to both dispensers before connecting the cable. Once the cable is firmly connected to the ports on both handsets, power may then be reapplied. Press ▲ if you wish to receive setup information from another handset, or press ENTER to continue without receiving the setup. NOTE: You can receive setup information with only one of the dispensers powered up (e.g. when carrying a spare handset). Be sure to shut off the dispenser before connecting the handsets. **WARNING: The USB-type port is for linking OP-Global handsets only! Do not connect any USB device, or a computer, to the port. Connecting to a computer may damage the computer or the handset.**
ARE YOU SURE? **UP=YES ENTER=NO**	If you pressed YES, this prompt will appear to double check that you are sure you want to receive setup.
DISPENSER **ID # = 00**	This selection allows the dispenser id number to be changed. Use the SCROLL and ▲/▼ buttons to establish the new id number, then press ENTER to log the data into memory. When finished, press ENTER to continue. NOTE: Set your dispenser ID's so that they correspond with the washer numbers. Pressing NO allows you to move through the menu selection. In a "multilink" where several dispensers at the same installation site are connected together, be sure that each dispenser has its own unique ID number. IF MORE THAN ONE SYSTEM HAS THE SAME ID NUMBER, COMMUNICATION ERRORS WILL RESULT.
MAIN **ACCESS CODE=000**	This selection allows the "main" access code to be changed. The main access code allows entry into the programming menus as well as report functions. Use the SCROLL and ▲/▼ buttons to set a new code number, then press ENTER to continue. NOTE: If the access code is changed, keep a record of the new code in a safe place. If the new code is forgotten, contact Knight.

USER ACCESS CODE=000	This selection allows the user access code to be changed. Use the SCROLL and ▲/▼ buttons to establish the new code number, then press ENTER to log the data into memory. When finished, press ENTER to continue. NOTE: The user access code allows access to a limited number of menu selections.
UNIT OF MEASURE = US	This selection allows you to choose between US or Metric units of measure. Use the SCROLL and ▲/▼ buttons to establish the unit of measure, then press ENTER to log the data into memory. When finished, press ENTER to continue.
SIGNAL LOCKOUT = 00 MINUTES	This selection sets the time (in minutes) that signal lockout will disregard incoming supply signals. The setting applies to all pumps except the load count pump. Use the SCROLL and ▲/▼ buttons to choose a lockout time between 0 and 99 minutes, then press ENTER. When finished, press ENTER to continue. NOTE: The signal lockout feature is by-passed when the system is operating in relay mode, as the pumps are directly controlled by the signals from the washer's controller.
DELAY UNITS = SECONDS	This selection allows you to choose seconds or minutes as the delay time unit of measure. Use the ▲/▼ buttons to choose the desired setting, then press ENTER to continue.
PMP 7 & 8 = DISABLE	Check the dispenser circuit board to determine if there are output connections for pumps 7 and 8. If there is, choose ENABLE using the ▲/▼ buttons. If the circuit board does not have connections for pumps 7 and 8, make sure this menu selection is set to DISABLE. When fincished, press ENTER to continue
OPERATING MODE = NORMAL	This selection allows you to choose between the following modes of operation: Normal, Drain, Relay, or Soil. Use the ▲/▼ buttons to select the desired operating mode, then press ENTER.
DRAIN SIGNAL = NORMAL	NOTE: You will only see this display if Drain Mode was selected in the previous step. This selection allows you to select if the drain signal is to be NORMAL or INVERTED. Use the ▲/▼ buttons to make your selection, then press ENTER to continue.
PUMP LEVELS = ENABLED	This selection allows you to choose if you wish to use multiple pump level programming. Pump levels allow the pumps to dispense up to 3 individual dosage amounts within the same formula. Use the ▲/▼ buttons to choose either enable or disable, then press ENTER.

SYSTEM LOCKOUT **= 00 MINUTES**	This selection sets the time (in minutes) that the system will be "locked-out" to all incoming supply signals. The lock-out time is started by a signal to the load count pump. Use the SCROLL and ▲/▼ buttons to choose a lockout time between 0 and 99 minutes, then press ENTER. When finished, press ENTER to continue.
LOAD COUNT PUMP **= 6**	This selection shows which pump is being used to count loads. Always enter the last pump in the system that will receive a signal. Use the ▲/▼ buttons to choose the number, then press ENTER. When finished, press ENTER to continue.

IMPORTANT: The load count pump must receive a signal on every washcycle for the system to operate correctly (even if the load count pump will not actually dispense chemical for the formula selected).

When the load count pump receives a signal, the load counter is incremented as well as resetting bleach defeat, formula levels, and signal lockout in preparation for the next washcycle.

This setting is critical when using Drain Mode to maintain proper injection sequence. Normally you will set the load count pump to correspond with the last drain signal that will be received during the formula, however there may be additional drain signals that occur after the last pump has injected. In this situation, a fictitious pump can be assigned to act as a load count pump.

FLUSH MODE **= WITH**	This selection allows you to select how you want the flush mode to operate (if a flush time will be set). Use the ▲/▼ buttons to choose if the flush will happen *with* any pump, or *after* any pump. Make a selection, then press ENTER.
FLUSH TIME **= 00 SECONDS**	This selection allows you to set the flush time for all formulas, or if using RELAY MODE. To set the flush time (in seconds) use the SCROLL and ▲/▼ buttons to establish the desired time, then press ENTER. This is the amount of time that the flush will stay active when a pump finishes injecting.
SIGNAL TIME **= __SECONDS**	This selection allows you to determine the appropriate length of a valid supply signal from the washer. Supply signals must be of a duration that matches the minimum setting to activate any pump in the system, or start a pump delay. The range is from 1 to 10 seconds. To set the signal (qualify) time use the SCROLL and ▲/▼ buttons to establish the desired time, then press ENTER.
WASHER WEIGHT **= 000 LBS**	This selection allows you to enter the load capacity for the wash wheel that the dispenser is presently connected to. Use the SCROLL and ▲/▼ buttons to establish the new washer weight, then press ENTER to log the data into memory. When finished, press ENTER to continue.
SHIFTS 1=06:00 **2=11:00 3=17:00**	This selection allows you to enter the shift times. Shift times are entered on a 24 hour clock cycle (like military time). Use the SCROLL and ▲/▼ buttons to establish the new shift times, then press ENTER to log the data into memory. When finished, press ENTER to continue.

BLEACH DEFAULT = ENABLED	NOTE: You will only see this display if using Soil Mode. This selection shows the default status of the bleach pump. If set to “enabled”, the bleach pump will pump chemical unless manually overridden with the button on the keypad. If “disabled”, the bleach pump will not pump chemical unless manually overridden. Use the ▲/▼ buttons to choose the desired default setting, then press ENTER to continue.
BLEACH PUMP = 0	NOTE: You will only see this display if using Soil Mode. This selection shows which pump number you will be using as your bleach pump. Use the ▲/▼ buttons to set the bleach pump number, then press ENTER.
SOFTENER DEFAULT = ENABLED	NOTE: You will only see this display if using Soil Mode. This selection shows the default status of the softener pump. If set to “enabled”, the softener pump will pump chemical unless manually overridden with the button on the keypad. If “disabled”, the softener pump will not pump chemical unless manually overridden. Use the ▲/▼ buttons to choose the desired default setting, then press ENTER to continue.
SOFTENER PUMP = 0	NOTE: You will only see this display if using Soil Mode. This selection shows which pump number you will be using as your softener pump. Use the ▲/▼ buttons to set the softener pump number, then press ENTER.
SIGNAL MODE = ONE TO ONE	This selection allows you to choose which pump signal mode you wish to use. Use the ▲/▼ buttons to choose the desired pump signal mode, then press ENTER to continue. **ONE-TO-ONE:** Each pump has its own independent signal. **ASSIGNED STEP:** Each signal input on the SIB becomes a signal number (for programming) and can be assigned to multiple pumps in each formula. Pump inputs 2 and 5 (main wash signals) become level 3 for any pumps that are assigned to it. **ASSIGNED SIG:** Each signal input on the SIB becomes a signal number (for programming) and can be assigned to multiple pumps in each formula. Each time an assigned signal is received, the pump will sequence through normal volume levels.
AFS PUMP = 6	NOTE: This menu setting and the following AFS menu settings will not appear if using Relay Mode or Soil Mode. This selection sets which pump signal input will be used for the auto formula select feature. Choose an “unused” pump input (i.e. one that is not used to trigger a chemical injection). Use the ▲/▼ buttons to select the appropriate AFS pump, then press ENTER. IMPORTANT: Chart mode can only use pump 6, 7, or 8 as the AFS pump activation signal.

AFS MODE **= MICRO**	This selection allows you to choose which AFS mode will be used to select formulas. See the notes below for details on how the modes work. Use the ▲/▼ buttons to select the appropriate AFS mode, then press ENTER.

MICRO: For use with microprocessor controlled washers that can send a signal of exact duration to the unit. The controller interprets the duration of the signal as the formula number requested, based on the AFS TIME setting explained in the next menu selection.

CHART: For use with card-reader type machines. Uses a combination of signals to pick the formula in a "binary" numbering format. The auto formula select signal must be applied for a minimum of 30 seconds.

AFS TIME **= 1 SECOND**	This selection is used with AFS micro mode to establish a time "increment" for selecting formulas. The signal duration will be divided by the number selected to choose the formula. The available signal time increments (in seconds) are 1—5. Example: If AFS signal time is set for 2, a 20 second signal from the washer would choose formula 10 on the dispenser. Use the ▲/▼ buttons to select the appropriate AFS time, then press ENTER.
AUTO FORM RESET **= DISABLED**	This selection allows you to choose if you wish to use auto formula reset. This feature resets the formula number to 00 after the load count pump activates. In cases where automatic formula select is OFF (formulas selected manually), this feature ensures that an operator cannot wash a load with the wrong formula. When a washcycle is finished, the next formula must be manually chosen. Use the ▲/▼ buttons to choose either enable or disable, then press ENTER.
SET TIME / DATE ? **UP=YES ENTER=NO**	This selection allows you to choose if you wish to set the system time and date. Press ▲ if you wish to set time and date, or press ENTER to continue without changing.
MO XX DAY XX YR XX **HR XX MIN XX SEC XX**	Use the SCROLL and ▲/▼ buttons to set the date and time, then press ENTER.
PROG FORM ENABLE **UP=YES ENTER=NO**	This selection allows you to choose which formulas will be selectable to operators. Press ▲ if you wish to change formula disable status, or press ENTER to continue without changing.
FORMULA DISABLE **FORMULA 01 = ENA**	Use the ▲/▼ buttons to select the formula number, then press SCROLL (to move the cursor to the right). Use the ▲/▼ buttons again to select enable or disable status , then press ENTER. Repeat for each formula necessary. NOTE: When finished setting formula enable/disable status, hold down the SCROLL button until you see the previous display (this will only take a few seconds).

PROG FORM NAMES? **UP=YES ENTER=NO**	This selection allows you to change the formula names. Press ▲ if you wish to change formula names, or press ENTER to continue without changing.
NAME FORMULA 01 **FORMULA 01**	Use the ▲/▼ buttons to select the formula number, then press SCROLL (to move the cursor to the bottom). Use the ▲/▼ and SCROLL buttons again to change the individual characters of the formula name, then press ENTER. Repeat for each formula necessary. NOTE: When finished setting formula names, hold down the SCROLL button until you see the previous display (this will only take a few seconds).
PROG PUMP INFO? **UP=YES ENTER=NO**	This selection allows you to change the chemical pump names and cost. Press ▲ if you wish to change pump information, or press ENTER to continue without changing.
PUMP 1 **PUMP –01 $00.00G**	Use the ▲/▼ buttons to select the pump number, then press SCROLL (to move the cursor to the bottom). Use the ▲/▼ and SCROLL buttons again to change the pump name, then press ENTER. Another option is to hold down the ▲ button for a few seconds to browse through pre-programmed pump names (shown in the appendix). Repeat for each pump necessary. NOTE: When finished setting pump information, hold down the SCROLL button until you see the previous display (this will only take a few seconds).
CALIBRATE PUMPS? **UP=YES ENTER=NO**	This selection allows you to set the pump calibrations (flow rates). Press ▲ if you wish to calibrate or change pump flow rates, or press ENTER to continue without changing.
MANUAL CALIBRATE **UP=YES ENTER=NO**	Press ▲ if you wish to manually view, or change, pump flow rates, or press ENTER to auto-calibrate.
P1 FLOW RATE **010.0 OZS/MIN**	Use the ▲/▼ buttons to select the pump number and view the existing flow rate. Press SCROLL (to move the cursor to the bottom) then use the ▲/▼ and SCROLL buttons again to change the number of ounces per minute of the pump and press ENTER. NOTE: When finished setting pump flow rates, hold down the SCROLL button until you see the calibration display (this will only take a few seconds).

CALIBRATE PUMP 1 **ENTER START/STOP**	**Auto-Calibrate Function** Use the ▲/▼ buttons to select the pump number and press ENTER to start the pump. Measure out the volume dispensed into a beaker or measuring cup. Press ENTER again and you will see the following display. NOTE: To exit, you must hold down the SCROLL button to return to the previous display.
VOLUME PUMPED **000.0 OZS ENTER**	Use ▲/▼ and SCROLL to input the number of ounces you measured in the previous step and press ENTER.
FLOW RATE **P1=010.0 OZS/MIN**	The resulting flow rate will then be displayed for the pump that you just auto-calibrated. Press ENTER to continue with calibrating other pumps.
PROG FORMULAS ? **UP=YES ENTER=NO**	This selection allows you to change the formula settings (dosage amounts, delay times, levels, etc). Press ▲ if you wish to change formula settings, or press ENTER to continue without changing.
FORM01 L1 PUMP1 **000 .0 OZS DT=000**	Use SCROLL and ▲/▼ to choose the desired formula/ level/pump on the top line, then press SCROLL to move the cursor to the bottom line. Use SCROLL and ▲/▼ to set the pump volume and delay time (if required) and press ENTER. Repeat these steps for all pumps and formulas that will be used. When finished programming the formulas, hold down the SCROLL button until you see the previous display (this will only take a few seconds). NOTE: If using Soil Mode programming, the soil classifications are programmed as formula numbers. See the following soil / formula matchups: ▫ Heavy Soil = Formula 1 ▫ Medium Soil = Formula 2 ▫ Light Soil = Formula 3

PROG DRAIN COUNT **UP=YES ENTER=NO**	NOTE: You will only see this display if using drain mode. This selection allows you to change the drain counts. Press ▲ if you wish to change drain counts, or press ENTER to continue without changing.
FORM01 L1 PUMP1 **DRAIN COUNT = 00**	This selection allows you to enter the drain assignment for each pump and formula. Use the SCROLL and ▲/▼ buttons to choose formula, level, and pump number on the top line, then press SCROLL to move the cursor to the bottom line. Set the appropriate drain count and press ENTER again. Repeat these steps for each pump on in each formula that will be used. When finished setting drain counts, hold down the SCROLL button until you see the previous display (this will only take a few seconds). NOTE: Be sure to assign the load count pump to the final drain count to properly end the washcycle. If there are additional drain signals after the load count pump, you can work around this by assigning a pump that is not used to the final drain (e.g. use pump 7 or pump 8).
PROG PMP SIGNALS **UP=YES ENTER=NO**	NOTE: You will only see this display if using assigned signals. This selection allows you to change the assigned signals. Press ▲ if you wish to change assigned signals, or press ENTER to continue without changing.
SIGNAL 1 = L1 **PUMPS 0 0 0**	***...if using Assigned Step mode*** Use the ▲/▼ buttons to choose the signal number, then press SCROLL to move the cursor to the bottom line. Use SCROLL and ▲/▼ to choose which pumps will be activated by this signal, then press ENTER. When finished assigning signals, hold down the SCROLL button until you see the previous display (this will only take a few seconds).
SIGNAL 1 = **PUMPS 0 0 0**	***...if using Assigned Signal mode*** Use the ▲/▼ buttons to choose the signal number, then press SCROLL to move the cursor to the bottom line. Use SCROLL and ▲/▼ to choose which pumps will be activated by this signal, then press ENTER. When finished assigning signals, hold down the SCROLL button until you see the previous display (this will only take a few seconds).
UPDATE SOFTWARE ? **UP=YES ENTER=NO**	NOTE: A future release upgrade kit and instruction sheet is required to use this function. Press ENTER to continue.

To exit the programming mode, hold down on the SCROLL button until the normal operating screen appears (this will only take a few seconds).

KNIGHT, LLC
A Unit of IDEX Corporation
20531 Crescent Bay Dr.
Lake Forest, CA 92630-8825, U.S.A
Phone: (949)595-4800
Fax: (949)595-4801
www.knightequip.com

EC – DECLARATION OF CONFORMITY

Equipment Description: **Laundry Chemical Dispenser Systems**

Type/Model Number: **On Premise Global**

The signing legal authorities state that the above mentioned equipment meets the requirements for emission, immunity and safety according to.

Application of Council Directives:

Electromagnetic compatibility
(EMC) Directive 2004/108/EC (and former Directive 89/336/EEC as amended by 92/31/EEC and 93/68/EEC)

Standards to Which Conformity Is Declared: **EN 61326-1: 2006** Electrical Equipment Measurement, Control & Laboratory Use (Normal Environment)

For Information: The "Electromagnetic Test" took place at the DNB Engineering, Riverside, CA, U.S.A

Electrical Safety
Low Voltage Directive (LVD) 2006/95/EC (and former Directive 73/23/EEC)

Standards to Which Conformity Is Declared: **EN 61010-1** (2nd Edition) - Safety Requirements for Electrical Equipment for Measurement, Control, and Laboratory Use - Part 1: General Requirements

For Information: The "Electrical Safety Test" took place at the CSA International, Irvine, CA, U.S.A

Signature of representative of manufacturer:



Name: Comiskey, Brian

Position: Vice President Global Engineering

Date: December 15, 2008

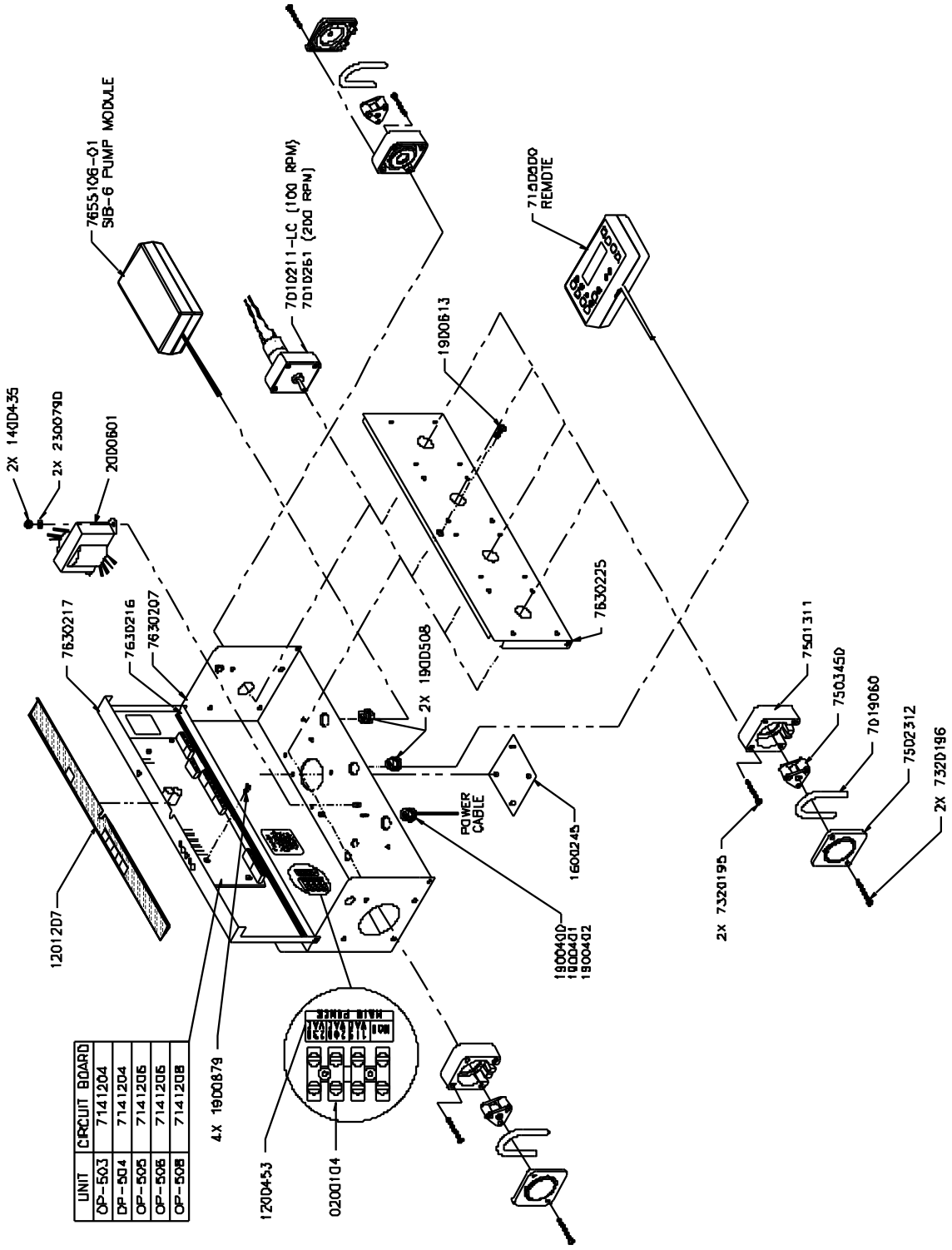
7655106-01
SIB-6 PUMP MODULE
70102211-LC (100 RPM)
70102261 (200 RPM)
7150500
REMOTE
1900613
2X 1400435
2X 2300790
2000601
7630217
7630216
7630207
2X 1900508
7630225
7501311
7503450
7019060
7502312
2X 7320196
2X 7320195
POWER CABLE
1600245
1900400
1900401
1900402
1201207
4X 1900879
1200453
0200104
MAIN FUSE
UNIT | CIRCUIT BOARD
OP-503 | 7141204
OP-504 | 7141204
OP-505 | 7141205
OP-506 | 7141205
OP-508 | 7141208

WIRING DIAGRAM

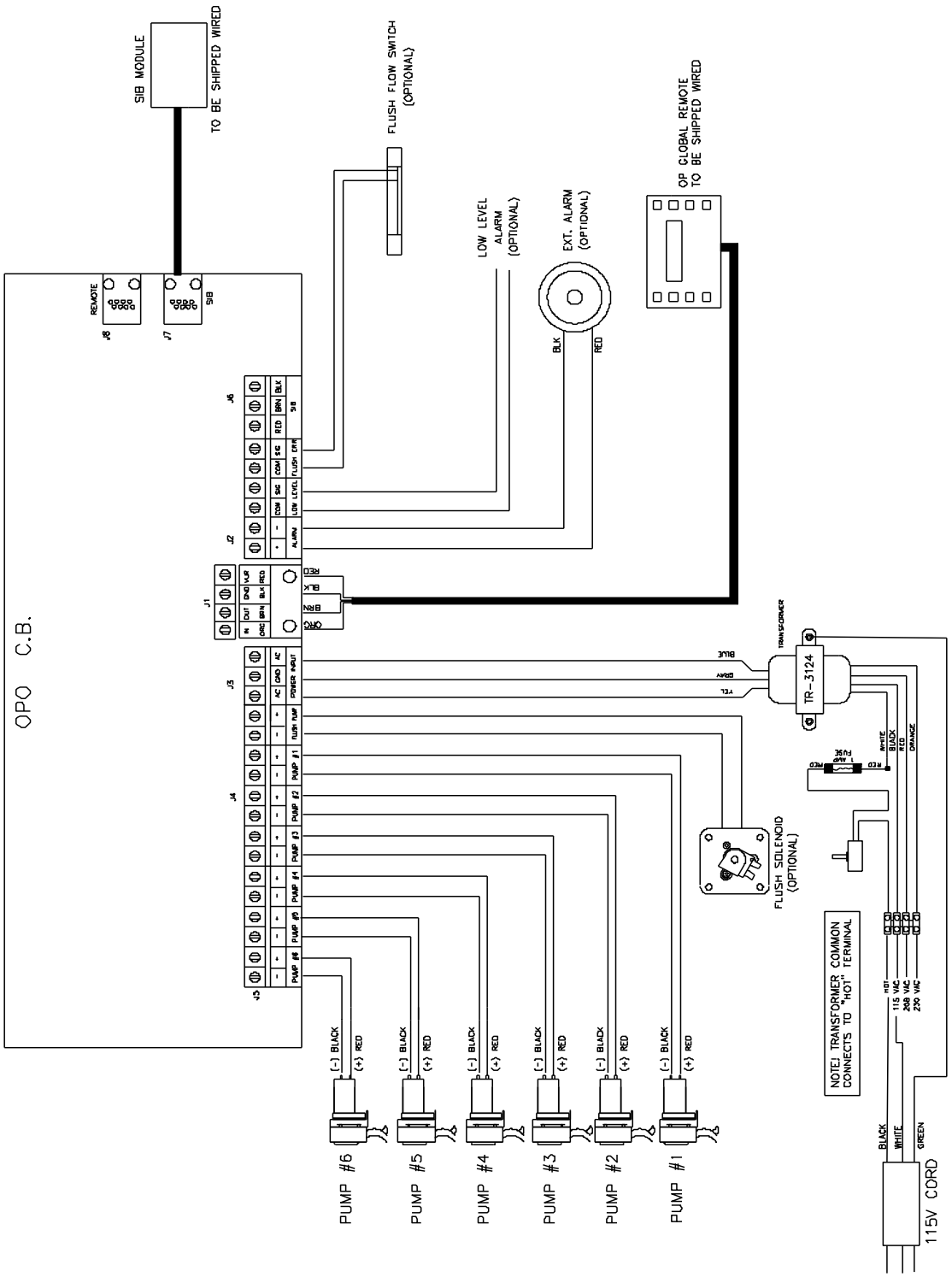

MULTILINKING WIRING DIAGRAM

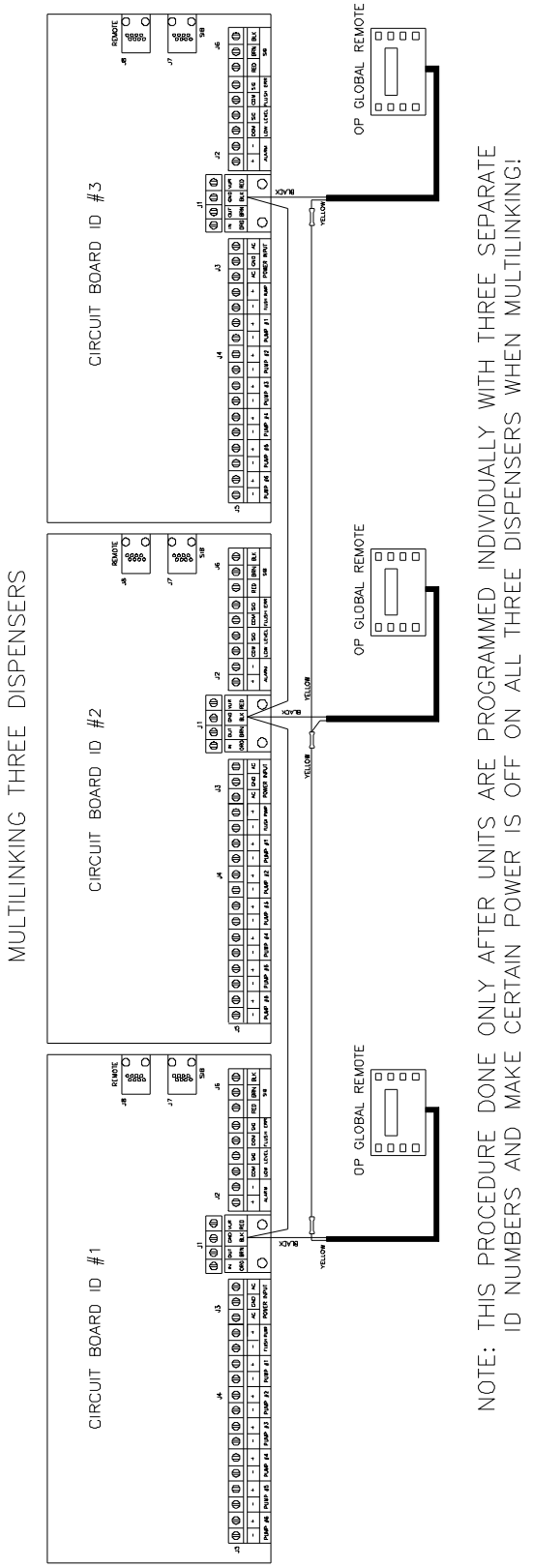

NOTE: THIS PROCEDURE DONE ONLY AFTER UNITS ARE PROGRAMMED INDIVIDUALLY WITH THREE SEPARATE ID NUMBERS AND MAKE CERTAIN POWER IS OFF ON ALL THREE DISPENSERS WHEN MULTILINKING!

Multilinking requires the following items:

0404783 OP Global Win Reporter CD-Rom Software 3.9 or higher

0300976 Network cable, KCI-6000 to OP Global

ON-PREMISE GLOBAL REPLACEMENT PARTS		
Part No.	**Description**	**List Price**
2000601	Transformer, TR-3124-End Bells, 115/208/230V-19Vac	$19.46
7019060	Tube, T-50E Elastic, .250In ID, 14In Cut	$9.13
7141204	Circuit Board Assy, OPO-4	$275.32
7141206	Circuit Board Assy, OPO-6	$312.86
7141208	Circuit Board Assy, OPO-8	$450.00
7150500	OP Global Remote Module with label	$293.39
7502312	KP-500 Face Plate Only (Clear)	$10.65
7010211-LC	Gearmotor w/ Cap 100RPM	$97.43
7010261	Gearmotor w/ Cap 200RPM	$118.88
7655106-01	Module, SIB-6 Pump with Cat-5 Cable	$251.33
7655110	Module, SIB-10 Pump with Cat-5 Cable	$309.35
7681045	KCI-6000 reporter interface module	$205.33
0404783	OP Global Win Reporter CD-rom Software 3.9	$123.25
0300976	Network cable, KCI-6000 to OP Global	$25.00
0300996	Cable, USB A to USB A (10 ft.)	$4.79
0300955	Cable, USB A to USB B (6 ft.)	$5.20
7630586	Kit, Mounting Bracket for remote	$32.16
1201207	Label, On-Premise Global, main	$14.30
1201272	Label, On-Premise Global, remote	$24.35

NOTES

DISCLAIMER

Knight LLC does not accept responsibility for the mishandling, misuse, or non-performance of the described items when used for purposes other than those specified in the instructions. For hazardous materials information consult label, MSDS, or Knight LLC. Knight products are not for use in potentially explosive environments. Any use of our equipment in such an environment is at the risk of the user, Knight does not accept any liability in such circumstances.

WARRANTY

All Knight controls and pump systems are warranted against defects in material and workmanship for a period of ONE year. All electronic control boards have a TWO year warranty. Warranty applies only to the replacement or repair of such parts when returned to factory with a Knight Return Authorization (KRA) number, freight prepaid, and found to be defective upon factory authorized inspection. Bearings and pump seals or rubber and synthetic rubber parts such as “O” rings, diaphragms, squeeze tubing, and gaskets are considered expendable and are not covered under warranty. Warranty does not cover liability resulting from performance of this equipment nor the labor to replace this equipment. Product abuse or misuse voids warranty.

FOOTNOTE

The information and specifications included in this publication were in effect at the time of approval for printing. Knight, LLC reserves the right, however, to discontinue or change specifications or design at any time without notice and without incurring any obligation whatsoever.

KNIGHT LLC, *A Unit of IDEX Corporation (www.knightequip.com)*

Knight Headquarters	USA Toll Free	Knight Canada	Knight Europe	Knight Australia	Knight N. Asia	Knight S. Asia
Tel: 949.595.4800	Tel: 800.854.3764	Tel: 905.542.2333	Tel: 44.1293.615.570	Tel: 61.2.9725.2588	Tel: 82.2.3481.6683	Tel: 65.6763.6633
Fax: 949.595.4801	Fax: 800.752.9518	Fax: 905.542.1536	Fax: 44.1293.615.585	Fax: 61.2.9725.2025	Fax: 82.2.3482.5742	Fax: 65.6764.4020